知识城集团 KCI GROUP

广亚幕墙门窗 GUANGYA CURTAIN WALL & WINDOW DOOR

知识城广亚（广州）建筑工程有限公司

KCI GUANGYA(GUANGZHOU) CONSTRUCTION ENGINEERING CO., LTD

佛山市广亚幕墙门窗系统工程有限公司

GUANGYA CURTAIN WALL & WINDOW DOOR SYSTEM ENGINEERING CO.,LTD

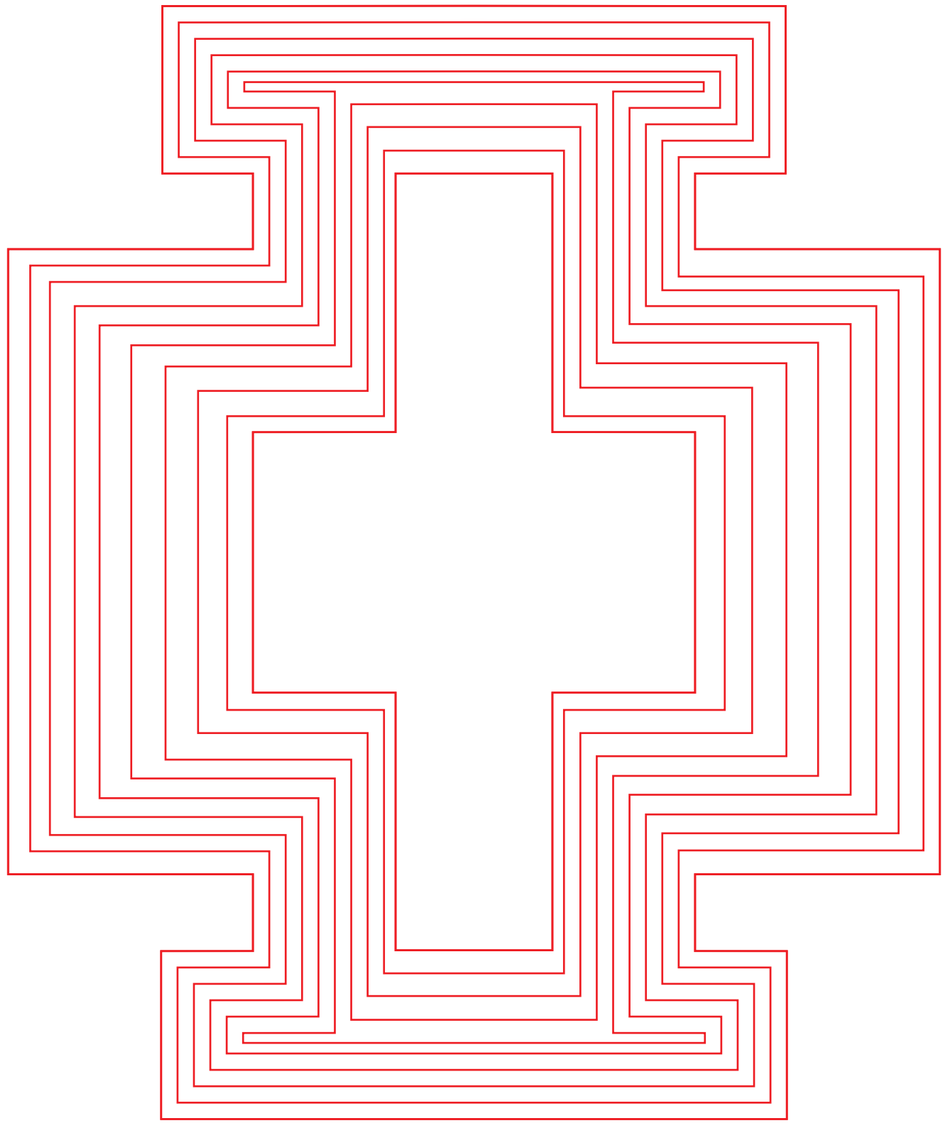

知识城广亚（广州）建筑工程有限公司

KCI GUANGYA(GUANGZHOU) CONSTRUCTION ENGINEERING CO., LTD

佛山市广亚幕墙门窗系统工程有限公司

GUANGYA CURTAIN WALL & WINDOW DOOR SYSTEM ENGINEERING CO.,LTD

网　站：www.gywindoor.com
邮　编：528237
联　系：0757-81190323
E-mail：info@gywindoor.com
地　址：佛山市南海区狮山镇国家高新技术产业开发区官窑永安大道68号
NO.68 Yong'an Anenue, Guanyao, National High-tech Industrial Development Zone, shishan, Nanhai, Foshan, Guangdong, China



COMPANY INTRODUCTION

公司简介

2006 年
2006年公司成立
Established in 2006

40000 平方米
占地面积
Cover an area of 40,000 square meters

12000 平方米
门窗月产量
Windows and doors monthly output: 12000 SQM

5000 平方米
幕墙月产量
Curtain wall monthly output: 5000 SQM

佛山市广亚幕墙门窗系统工程有限公司

GUANGYA CURTAIN WALL & WINDOW DOOR SYSTEM ENGINEERING CO.,LTD

建立于 2006 年，位于佛山市南海区狮山镇。公司占地 40000 平方米，专业制造设计与生产、销售铝合金门窗、铝型材以及相配套的配件，承接铝合金门窗和幕墙系统工程。

拥有建筑幕墙工程设计与施工（二级）、金属门窗工程专业承包（三级）资质。有高素质技术队伍和管理团队，400多名员工，包括20名二级建造师和20名设计师。

推行 ISO2000 质量管理体系，产品通过 CQC 节能认证及澳洲 AS2047 认证。自主创新门窗产品系列丰富，并引进欧洲门窗系统。产品覆盖香港、澳门、华南等国内市场，以及澳大利亚（悉尼/墨尔本/布里斯班）、 美国夏威夷、 加拿大温哥华、新西兰、 日本、柬埔寨、法国、 巴布亚新几内亚、 印度尼西亚、菲律宾、智利、乌拉圭、尼日利亚等10多个国家或地区。

公司坚持“合作、分享、共同发展”理念，欢迎合作。有 10 多年研发团队，形成自有品牌，经验丰富，行业领先。推行 ISO9001 质量管理体系，产品通过多项认证。

Guangya Curtain Wall and Window Door is an integrated company, integrating R&D, design, fabrication, and marketing in aluminium windows and doors, as well as glass curtain walls. Our products are popular in Australia, South America, and Southeast Asia. At present, our products have been exported to Australia (Sydney, Melbourne, Brisbane), USA, New Zealand, Canada Vancouver, Japan, Hong Kong Region, Macau region, Cambodia, France, Papua New Guinea, Indonesia, Philippines, Chile, Uruguay, Nigeria, which has won the trust and support of the new and old customers. Since the establishment of our company, we always adhere to our business philosophy, “Honesty pragmatic, Innovation and efficient, Humility and enterprising” Combining with the development of the domestic and international aluminum products market, we rely on the abundant technical force and equipment continuously innovation and development.

Covering an area about 40,000 ㎡ , our annual output reaches more than 200000 square meters, and our product got satisfaction from the customer.

知识城广亚（广州）建筑工程有限公司简介

KCI GUANGYA (GUANGZHOU) CONSTRUCTION ENGINEERING CO., LTD.

知识城广亚（广州）建筑工程有限公司，是一家专注于建筑工程领域的企业。公司总部位于广州市黄埔区，紧邻广州经济技术开发区，地理位置优越，交通便利。公司注册资本金雄厚，技术力量强大，致力于为客户提供高品质的建筑产品和专业化的服务。

公司主要从事房屋建筑工程、市政公用工程、建筑装修装饰工程、钢结构工程、土石方工程、地基与基础工程、园林绿化工程等多项业务的施工与管理。具备国家建设部门颁发的多项专业承包资质，能够满足客户多样化的需求。

公司秉承“诚信为本，质量至上”的经营理念，坚持“以人为本，安全第一”的管理方针。注重企业文化建设，倡导团队协作精神，营造和谐的工作氛围。公司多次荣获“守合同重信用企业”、“安全生产先进单位”等荣誉称号。

展望未来，知识城广亚（广州）建筑工程有限公司将继续秉承优良传统，不断创新进取，为客户提供更加优质的服务和产品。公司将紧跟时代步伐，积极参与粤港澳大湾区建设，为实现中华民族伟大复兴的中国梦贡献力量！

KCI Guangya (Guangzhou) Construction Engineering Co., Ltd. is a leading enterprise in the construction industry, dedicated to providing high-quality construction services and solutions. Located in Guangzhou, a vibrant city in southern China, the company leverages the region's rich resources and favorable geographical location to deliver exceptional projects.

Established with a strong foundation in professional expertise and a commitment to excellence, Guangya Construction has been a prominent figure in the construction scene for years. The company boasts a team of skilled professionals, including architects, engineers, builders, and technicians, who are adept at handling various types of construction projects, from residential and commercial buildings to infrastructure and industrial facilities.

Overall, KCI Guangya (Guangzhou) Construction Engineering Co., Ltd. is a reputable and reliable construction partner, committed to delivering exceptional projects that stand the test of time. We strive to build long-lasting relationships with our clients and contribute to the growth and development of the communities we serve.

广亚铝业 三大基地/PRODUCTION BASE

2021年12月 ，知识城（广州）投资集团有限公司正式通过知识城广亚（广州）控股集团有限公司控股广亚铝业。广亚铝业始创于1996年 ，拥有3大铝型材生产基地，1个铝模爬架生产基地，1个门窗幕墙生产基地，是集铝合金建筑型 材和工业铝型材的研发、 设计、生产、销售于一体的一站式铝应用解决方案专家。

广亚铝业连续多年获评国家高新技术企业 ，拥有中国驰名商标 ，先后被评为中国名牌产品、 国家生态建材示范展示中心示范企业、 中国铝型材行业质量领先企业、 建筑型材十大首选品牌等荣誉称号 ，并成功入选房地产开发企业综合实 力TOP500强首选供应商。

In December 2021, Knowledge City (Guangzhou) Investment Group Co., Ltd. officially took control of Guangya Aluminium Industry through Knowledge City Guangya (Guangzhou) Holding Group Co., Ltd. Founded in 1996, Guangya Aluminium Industry has three major aluminum profile production bases, one aluminum formwork climbing frame production base and one door, window and curtain wall production base. It is a one-stop aluminum application solution expert integrating the research and development, design, production and sales of aluminum alloy building profiles and industrial aluminum profiles.

Guangya Aluminium Industry has been rated as a national high-tech enterprise for many consecutive years and has a well-known trademark in China. It has been successively rated as a famous brand product in China, a demonstration enterprise of the National Ecological Building Materials Demonstration and Exhibition Center, a leading enterprise in the quality of China's aluminum profile industry, and one of the top ten preferred brands of building profiles. It has also been successfully selected as the preferred supplier of the top 500 real estate development enterprises in terms of comprehensive strength.



佛山南海总部基地
Foshan Nanhai Headquarters Base



佛山三水生产基地
Foshan Sanshui Production Base



山东临沂生产基地
Shandong Linyi Production Base



CORPORATE ADVANTAGE

企业资质





专业资质/PROFESSIONAL QUALIFICATIONS

-建筑门窗行业资格证书
-Building Door and Window Industry Qualification Certificate

-工程设计资质证书
-Engineering Design Qualification Certificate

-中国节能认证产品认证证书
-Product Certification Certificate of China Energy Conservation Certification

-安全生产许可证
-Safety Production License

-质量管理体系认证证书
-Quality management system certification

-澳洲AS2047-2014认证
-Australian AS2047-2014 certification

-建筑业企业资质证书
-Construction Enterprise Qualification Certificate

-外光设计专利证书
-Patent Certificate for Exterior Lighting Design

-产品质量鉴定证书
-Product Quality Authentication Certificate



10+	60+	200000m²
专业设备种类 Equipment type	专业设备数量 Number of devices	年生产量 Annual production volume

主要生产设备/PRODUCTION FACILITY

序号 Serial Number	设备名称 Equipment Name	规格型号 Specification and model	数量 Number	原产地/供应方 Origin/Supplier	购置时间 Purchase Time	备注 Notes
1	五轴机加工中心 Five-axis machining center	150	3	德国 Germany	2024	正常使用 normal use
2	平台锯 Platform saw	FU-350	8	中山信元 Zhongshan Xinyuan	2008	正常使用 normal use
3	数控双头锯 NC double-head saw	HF798,HF808	8	海富纳 Haifu Na	2013-2024	正常使用 normal use
4	数据铣订 Data milling and ordering	J01NT-5K1	2	深圳 Shenzhen City	2007	正常使用 normal use
5	三轴加工中心 Three-axis machining center	FU-120	4	中山信元 Zhongshan Xinyuan	2008	正常使用 normal use
6	CNC加工中心 CNC machining center	SLK-118	2	叶鲁设备 Yalu equipment	2023	正常使用 normal use
7	冲床 punch	40T	4	佛山铭尔机械 Foshan Minger Machinery Co., Ltd	2012	正常使用 normal use
8	冲床 punch	63T	4	佛山铭尔机械 Foshan Minger Machinery Co., Ltd	2012	正常使用 normal use
9	冲床 punch	25T	6	佛山铭尔机械 Foshan Minger Machinery Co., Ltd	2007	正常使用 normal use
10	冲床 punch	12T	3	佛山铭尔机械 Foshan Minger Machinery Co., Ltd	2006	正常使用 normal use
11	焊接机械手 Welding manipulator	AX21-E2000	3	欧地希机电 ODIC Electromechanical Co., Ltd	2010	正常使用 normal use
12	氩弧焊机 Argon arc welding machine	WSE-500	12	广州烽火电气 Guangzhou Fenghuo Electric Co., Ltd	2013	正常使用 normal use
13	双组份注胶机 Two-component gum injector	200-155	5	北京昌义和 Beijing Changyihe	2016	正常使用 normal use
14	台式攻丝机 Table tapping machine	SWJ-12	3	浙江中意机械 Zhejiang Zhongyi Machinery Co., Ltd	2008	正常使用 normal use

质量优势/PRODUCTION PROCESS

来料质量控制 Incoming Materials Control

新供应商开发：新供应商资质、技术能力。质量管理能力等全方位评估，选择合适供应商共同成长、互利互惠。
来料质量控制：客户对物料质量要求转化到采购标准中，通过供应商出货检查，内部专职质量人员入库检查，试试“双重把关”。
来料质量改进：来料质量信息动态反馈，重大质量问题与供应商联合分析改善，持续改进供应商质量管理能力。

Development of new suppliers: qualification and technical capacity of new suppliers. Comprehensive assessment of quality management capability, selection of suitable suppliers for mutual growth and mutual benefit.
Incoming material quality control: the customer's requirements for material quality are transferred to the purchase standard, and the "double check" is tried through the supplier's delivery inspection and the internal full-time quality personnel's warehousing inspection.
Improvement of incoming material quality: dynamic feedback of incoming material quality information, joint analysis and improvement of major quality problems with suppliers, and continuous improvement of suppliers' quality management ability.

质量体系运行 Quality System Operation

质量体系认证：2010年起获得ISO9001质量体系证书，通过第三方认证机构客观审核，质量体系持续符合标准并有效运行。
标杆客户审核：国内外标杆客户现场审核，从行业资质、产品设计、工艺技术、现场质量管理等获得客户好评。
质量活动策划：公司定期组织内审团队开展内部审核、管理评审等质 量体系策划活动，对质量体系持续改造。

Quality system certification: ISO9001 quality system certificate has been obtained since 2010, and the quality system continues to meet the standards and operates effectively through the objective audit of the third-party certification organization.
Benchmark customer audit: on-site audit of domestic and foreign benchmark customers, which has been well received by customers from industry qualification, product design, process technology, on-site quality management, etc.
Quality activity planning: the company regularly organizes the internal audit team to carry out internal audit, management review and other quality system planning activities, and continuously reform the quality system.

过程质量控制 Process Quality Control

不生产不良品：全方位识别5M1E关键要素。并形成目视化、标准化质量管理要求并彻底执行，从源头防止不良品产生。
不流出不良品：通过首件验证、员工自建、专项检查、动态质检等活动开展，让不良品不流出到客户端。
不使用不良品：过程出现品质异常，跨部门快速联动，对不良隔离、标识、判断、处理等，防止不良品非预期使用。

No production of defective products: identify key elements of 5M1E comprehensively. Visual and standardized quality management requirements shall be formed and thoroughly implemented to prevent the generation of non-conforming products from the source.
No outflow of non-conforming products: the non-conforming products will not flow out to the client through first article verification, employee self-construction, special inspection, dynamic quality inspection and other activities.
No use of defective products: in case of quality abnormality during the process, cross-department quick linkage, isolation, identification, judgment and treatment of defective products shall be carried out to prevent unexpected use of defective products.

客户端质量控制 Client Quality Control

客户要求原则：前期充分识别客户质量要求，转化为内部各工序，岗位具体的质量管控要点，确保客户质量要求落到实处。
出货质量保证：产品出货前对成品质量、包装要求、产品标识等专项检查，特殊性能通过第三方检验判断后方可出货。
异常处理机制：客户对产品质量提出疑问时，专职人员快速启动异常处理机制，采用8D法则分析并改善，防止再次发生。

Customer requirement principle: fully identify the customer quality requirements in the early stage, transform them into internal processes, specific quality control key points of the post, and ensure that the customer quality requirements are implemented.
Delivery quality assurance: before delivery, the finished product quality, packaging requirements, product identification and other special inspections shall be carried out, and the special performance shall be inspected and judged by the third party before delivery.
Anomaly handling mechanism: When the customer questions about the product quality, the full-time personnel quickly start the exception handling mechanism, analyze and improve it with 8D rule to prevent reoccurrence.

质量改善、质量培训 Quality Improve,Quality Training

质量改善活动：以质量部为中心，其他部门为辅助，以专题形式开展质量改善互动，并设置质量改善激励机制。
全员培训展开：全员开展质量意识灌输、质量控制要点讲解、专业技术分享等，提升质量管理水平。

Quality improvement activities: quality improvement interaction shall be carried out in the form of special topics with the Quality Department as the center and other departments as the assistance, and quality improvement incentive mechanism shall be set up.
Training for all staff: all staff shall carry out quality awareness infusion, explanation of key quality control points, professional technology sharing, etc. to improve the quality management level.

生产流程/PRODUCTION PROCESS

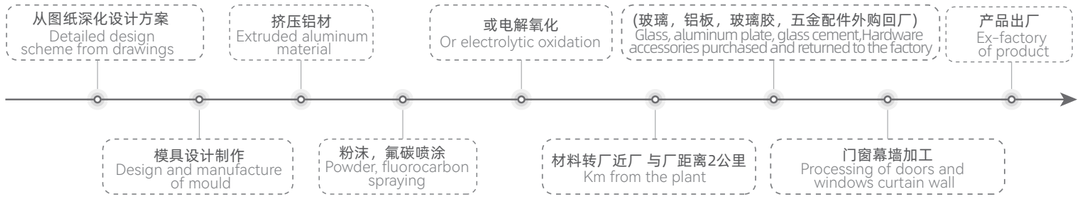

质检作业流程图/QUALITY INSPECTION OPERATION FLOW CHART







技术团队/TECHNICAL TEAM

专业构成Professional composition

我们的技术团队由200多名专业人员组成， 涵盖模具，幕墙， 门窗设计，拆图，工艺等多个关键领域。有二级建造师以上职称人员5人，项目经理5人，研发设计8人，门窗幕墙拆图12人， 工艺15人。

Our technical team consists of more than 200 professionals, covering many key areas such as molds, curtain walls, door and window design, demolition drawings, and craftsmanship. There are 5 people with professional titles of second-level construction engineer or above, 5 project managers, 8 people in R&D and design, 12 people in door, window and curtain wall demolition drawings, and 15 people in craftsmanship.

技术实力Technical strength

技术团队推行 ISO2000 质量管理体系，全员参与质量管理和 6S 管理。从设计到安装各环节，以严格标准、先进设备和精湛工艺确保产品质量，凭借经验和技能确保安装准确稳定，彰显强大实力。

The technical team promotes the ISO2000 Quality Management System, with all staff involved in quality management and 6S management. From design to installation, strict standards, advanced equipment and excellent craftsmanship are adopted to ensure product quality. And with our experience and skills, the accuracy and stability of installation are ensured, demonstrating our strong capabilities.

创新能力Innovation ability

技术团队创新精神十足。不断推出如 GP45、RP45 这类新门窗产品系列，将先进技术和创新设计相融合。同时积极引进欧洲知名门窗系统并加以本土化创新满足市场需求，且始终关注行业新趋势，为客户提供更具竞争力的产品及解决方案。

The technical team is highly innovative. They keep launching new door and window product series like GP45 and RP45, integrating advanced tech and innovative designs. Meanwhile, they introduce renowned European systems, localize them to meet market needs, and always follow industry trends to offer more competitive products and solutions to customers.

服务保障Service guarantee

我们技术团队以客户为中心，提供全方位服务保障。能按客户特殊要求个性化设计，生产中严格控制质量与进度确保按时交付，安装后提供优质售后服务。团队以高效生产能力和优质服务，每年完成近 20 万平方米生产量，获客户一致好评。

Our tech team centers on customers, providing full-service support. It customizes designs as per special requests, strictly controls quality and progress for on-time delivery, and offers good after-sales service. With efficient production and quality service, it completes nearly 200,000 sq m of production yearly, winning high praise from customers.

团队风采/TECHNICAL TEAM







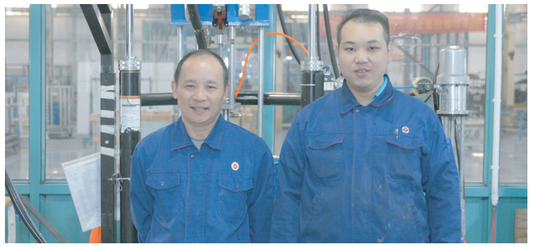









广亚幕墙

致力成为幕墙门窗行业标杆企业

To be a benchmarking enterprise in curtain wall and window & door industry



UNITIZED CURTAIN WALL SYSTEM

单元式幕墙

EUT175A系列单元式窗墙

EUT175A series unitized window wall

安装过程简便且快速，轻松就能完成。它的气密性与水密性极佳，密封严实，既能有效保温，又具备强大的抗震能力，为建筑空间提供可靠保障。

The installation process is simple and fast, and it can be easily completed. Its air tightness and water tightness are excellent, with a tight seal. It can not only effectively preserve heat but also possess a strong seismic resistance capacity, thus providing reliable protection for the building space.

玻璃规格	单玻及/夹胶/中空
材壁厚度	3.0mm
Glass Specifications	Single/Laminated/Double glass
Wall thickness	3.0mm

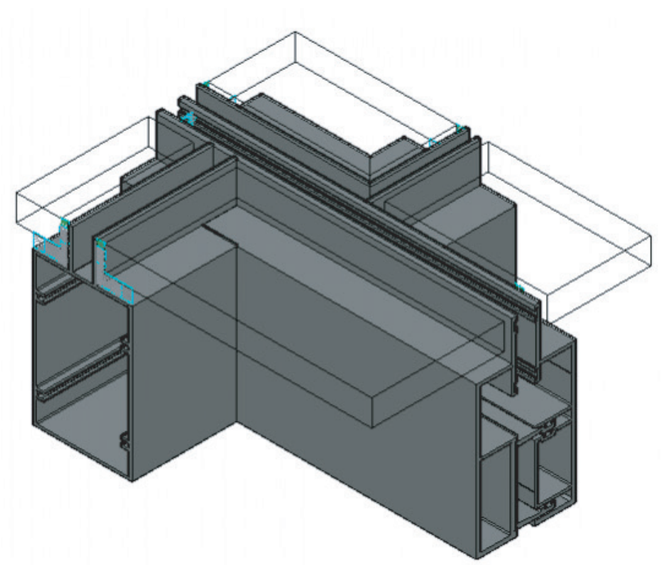

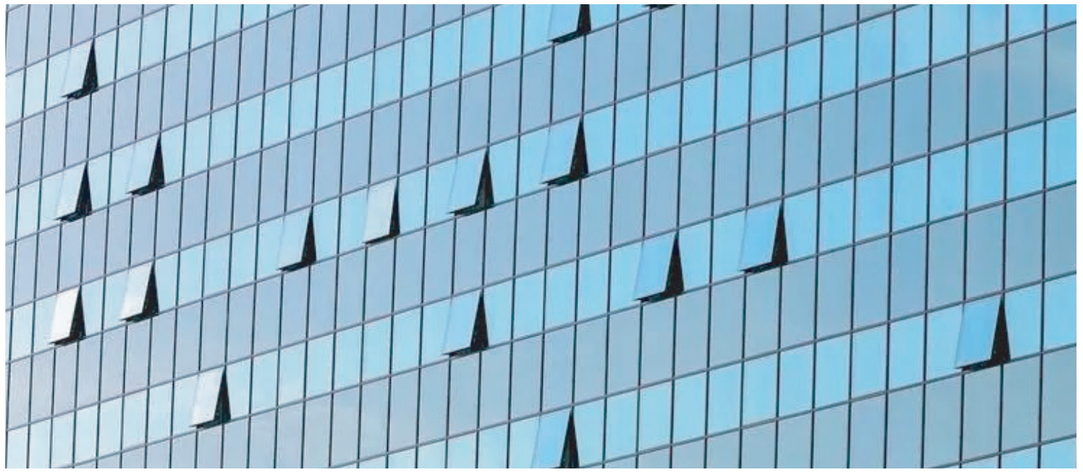

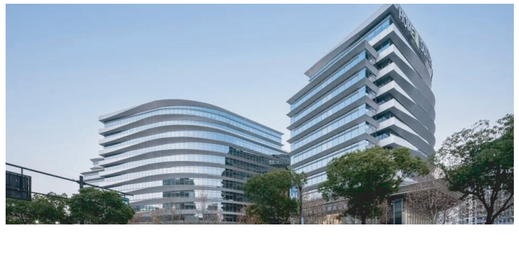



多元融合，彰显卓越--单元幕墙系统

Diversified Integration, Demonstrating Excellence - Unit Curtain Wall System

在建筑幕墙的创新领域中，融合了百叶与铝单板等元素的单元幕墙脱颖而出，成为现代建筑美学与功能的完美结合体。

单元幕墙的设计理念以工厂化预制、现场快速安装为核心，显著提升了建筑施工效率并保障了质量稳定性。每个单元板块在工厂内进行高精度加工制作，严格把控生产流程中的每一个细节，确保其到达施工现场后能精准拼接，减少误差累积，为建筑整体品质奠定坚实基础。

百叶元素的加入为单元幕墙赋予了灵动的功能性。电动或手动调节的百叶系统，可根据不同时段的阳光照射角度与强度灵活调整叶片角度。在阳光炽热的夏日，百叶紧密闭合，有效阻挡紫外线与热量的侵袭，降低室内空调能耗，实现节能环保目标；而在阳光柔和的春秋季，适当调整百叶角度，便能柔和地引入自然光线，营造温馨且舒适的室内光环境，同时保障通风顺畅，让新鲜空气自由穿梭于室内空间。

In the innovative field of building curtain walls, the unit curtain wall that combines elements such as louvers and aluminum composite panels stands out, becoming a perfect combination of modern architectural aesthetics and functionality.

The design concept of the unit curtain wall focuses on prefabrication in factories and rapid on-site installation, which significantly improves the construction efficiency of buildings and ensures the stability of quality. Each unit panel is processed and manufactured with high precision in the factory, and every detail in the production process is strictly controlled to ensure that it can be accurately spliced on the construction site, reducing the accumulation of errors and laying a solid foundation for the overall quality of the building.

The addition of louver elements endows the unit curtain wall with flexible functionality. The electrically or manually adjustable louver system can flexibly adjust the angle of the louvers according to the angle and intensity of sunlight at different times. In the scorching summer, the louvers are tightly closed to effectively block the invasion of ultraviolet rays and heat, reducing the energy consumption of indoor air conditioners and achieving the goal of energy conservation and environmental protection. While in the mild spring and autumn seasons, by appropriately adjusting the angle of the louvers, natural light can be softly introduced to create a warm and comfortable indoor lighting environment, while ensuring smooth ventilation and allowing fresh air to freely flow through the indoor space.



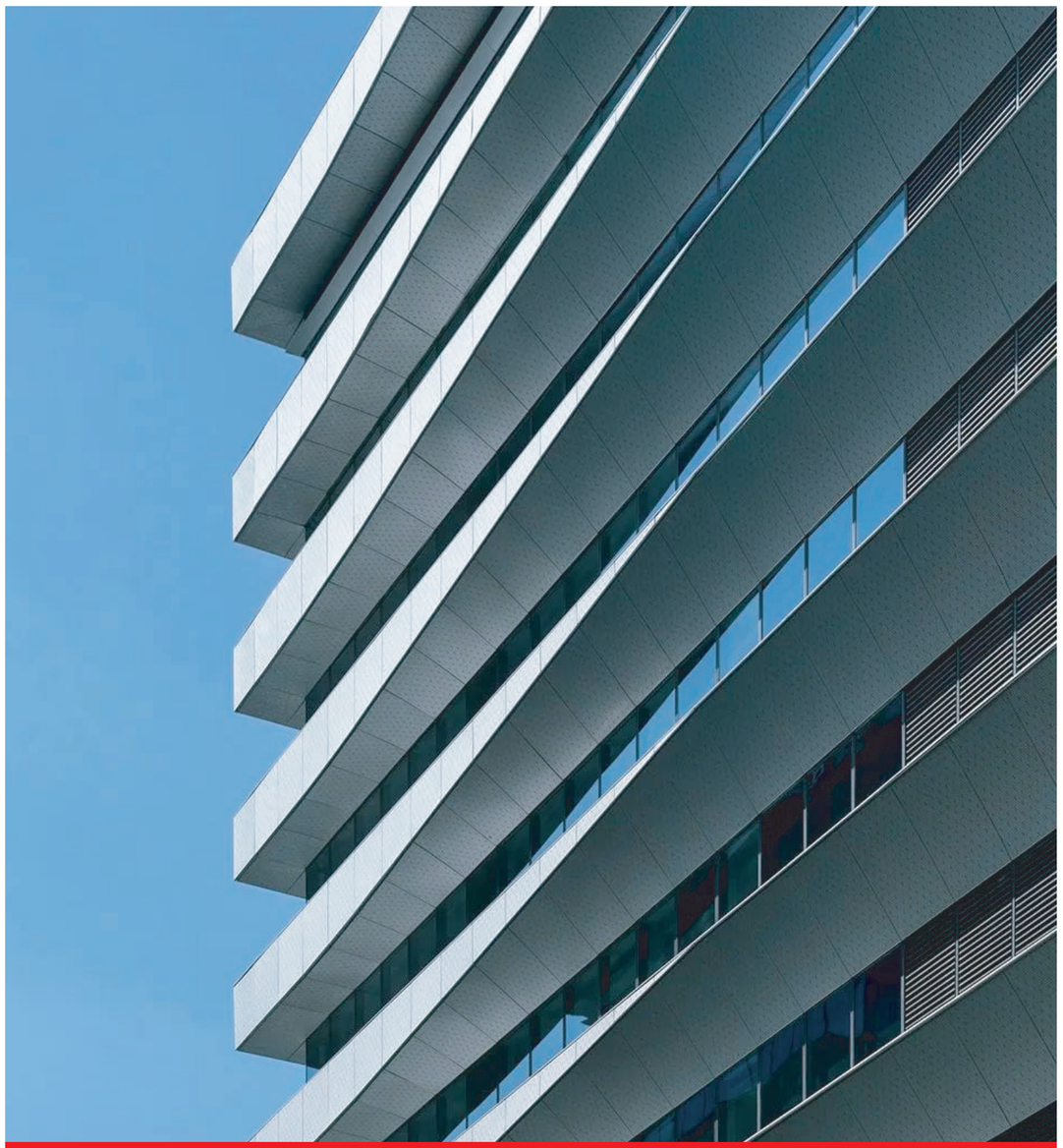

铝单板在单元幕墙中扮演着至关重要的角色。它以其轻盈却高强度的特质，轻松应对各类复杂建筑造型的挑战。无论是流畅的曲面还是锐利的棱角，铝单板都能精准呈现设计意图。其出色的耐候性确保在长期风吹雨打、日晒雨淋的恶劣气候条件下，依然保持色泽鲜亮、表面平整，不出现褪色、变形、腐蚀等问题。丰富多样的表面处理工艺，如细腻质感的氟碳喷涂、彰显金属质感的阳极氧化等，为建筑外观提供了丰富的视觉选择，从璀璨的金属光泽到低调的哑光效果，完美适配不同建筑风格的需求，极大地提升了建筑的整体艺术品味与格调。

Aluminum composite panels play a crucial role in the unit curtain wall. With their lightweight yet high-strength characteristics, they can easily meet the challenges of various complex architectural shapes. Whether it is a smooth curved surface or sharp corners, aluminum composite panels can accurately present the design intention. Their excellent weather resistance ensures that they still maintain bright colors and a flat surface under the harsh climate conditions of long-term wind, rain, and sunlight exposure, without problems such as fading, deformation, and corrosion. A wide variety of surface treatment processes, such as the fine-textured fluorocarbon spraying and the anode oxidation that highlights the metallic texture, provide rich visual options for the appearance of the building. From the brilliant metallic luster to the low-key matte effect, they perfectly match the needs of different architectural styles, greatly enhancing the overall artistic taste and style of the building.

FRAME CURTAIN WALL
框架式幕墙

玻璃规格 单玻及/夹胶/中空
材壁厚度 3.0mm
Glass Specifications Single/Laminated/Double glass
Wall thickness 3.0mm

隐框幕墙/Frameless curtain wall

其采用全悬挂式设计，凭借此设计优势，大幅增加室内采光量，使得整个空间更加明亮通透，舒适宜人。

It adopts the full-suspension design. By virtue of the advantages of this design, it significantly increases the amount of indoor daylighting, making the whole space brighter, more transparent and comfortable.

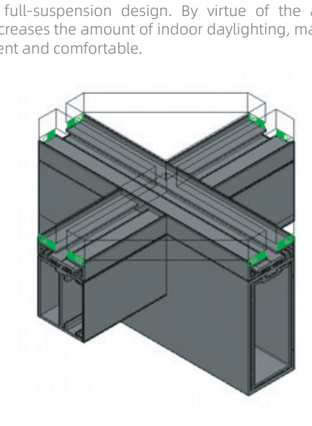



明框幕墙/Frame curtain wall

明框玻璃幕墙是最传统的形式，应用广泛，工作性能可靠，明框玻璃幕墙更易满足施工技术水平要求。

Frame curtain wall is the most traditional form. It is widely used and has reliable working performance. The exposed-frame glass curtain wall is more likely to meet the requirements of construction technology level.

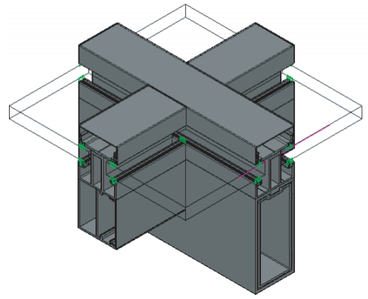

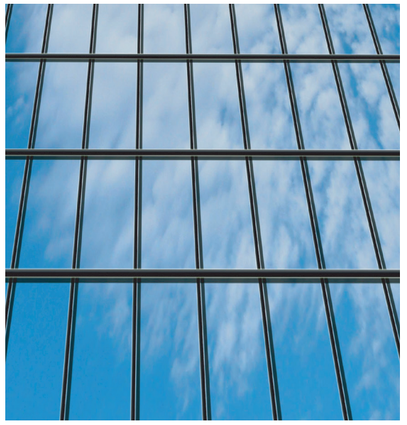

半隐框幕墙/Semi-frame curtain wall

竖明框的线条感凸显，横隐框简洁美感十足，它们相互搭配，成就了现代建筑那独树一帜的别样风格。

Semi-frame curtain wall is prominent, and the concise aesthetic feeling of the horizontal hidden-frame is full. When they are combined with each other, they have created a unique and distinctive style for modern architecture.

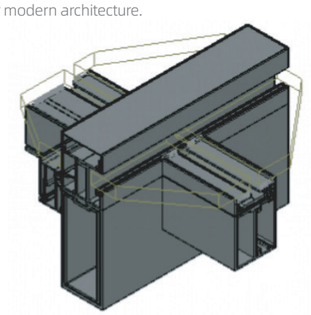

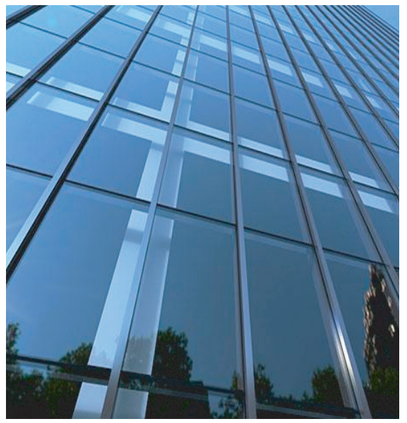

WINDOW WALL SYSTEM
窗墙系统

玻璃规格 单玻及中空玻璃

材壁厚度 2.0mm

Glass Specifications Single/Double glass

Wall thickness 2.0 mm



窗墙系统具有诸多显著优势。安装方面，简便且快速，可大幅节省时间与人力成本。性能上，其气密性和水密性表现优异，能实现良好的密封保温效果，并且抗震能力强劲，为建筑提供可靠保障。可搭配上悬窗，平开窗，平开门等一起使用，设计多样。

The window-wall system has many remarkable advantages. In terms of installation, it is simple and fast, which can significantly save time and labor costs. In terms of performance, it has excellent airtightness and watertightness, can achieve good sealing and heat preservation effects, and has strong seismic resistance, providing a reliable guarantee for buildings.It can be used with top-hung windows, casement windows, casement doors, etc., with various designs.

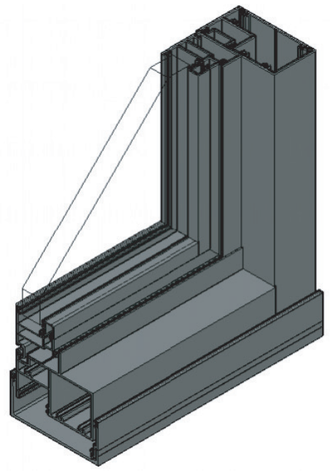

GYA100系列窗墙系统

GYA100 series
window wall system

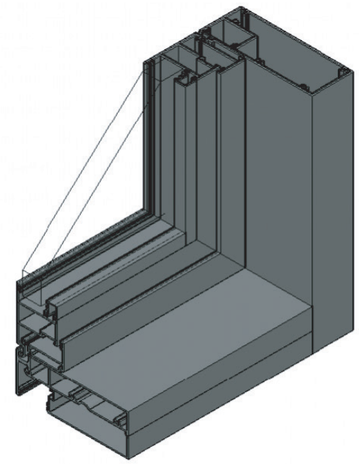

GYA150系列窗墙系统

GYA150 series
window wall system

普通窗墙系统/ORDINARY WINDOW-WALL SYSTEM

由常见的铝合金或塑钢窗框与玻璃组成， 安装在砖石或混凝土墙体上。具有成本较低、 施工方便的特点。能满足基本的采光和通风需求， 但保温隔热性能相对一般。广泛应用于一些普通住宅、小型商业建筑等对性能要求不高的场所。

成本较低	材料和施工成本相对较为经济实惠。
施工方便	安装工艺相对简单，施工周期较短。
基本功能	能满足日常的采光和通风需求。

Composed of common aluminum or plastic-steel frames & glass, installed on masonry/concrete walls. It's low-cost, easy to construct, meets basic lighting/ventilation needs but has average thermal insulation. Used in ordinary residences, small commercial buildings etc. with low performance requirements.
Low cost: Materials & construction are economical, fit for cost-sensitive projects.
Easy construction: Simple installation, short period.
Basic functions: Meets daily lighting/ventilation, with ordinary performance in thermal insulation, heat preservation & sound insulation.

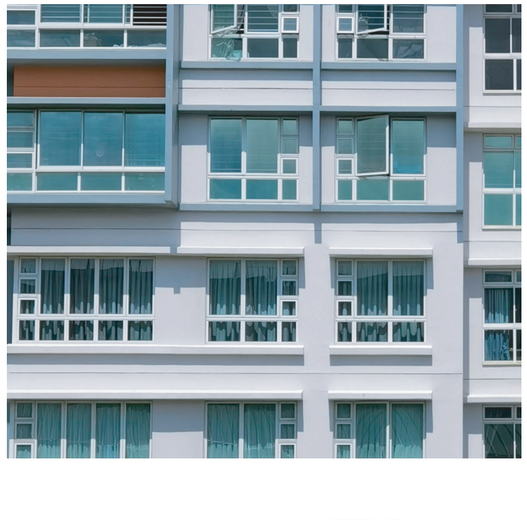

节能窗墙系统/ENERGY-SAVING WINDOW WALL SYSTEM

· 断桥铝窗墙系统

窗框采用断桥铝型材，玻璃一般为中空玻璃、Low-E 玻璃等高性能玻璃。适用于各种气候条件下的住宅、商业建筑、办公楼等，对节能要求较高的场所。

优异的保温性能	有效阻止热量在金属框中的传导提高窗户的保温性能。
良好的节能效果	搭配高性能玻璃， 能有效阻挡紫外线和红外线的辐射，减少室内外热量的交换，降低建筑能耗。
坚固耐用	断桥铝材质强度高，耐腐蚀，使用寿命长。

Broken bridge aluminum window wall system: Window frames use broken bridge aluminum profiles. Glass is usually high-performance types like insulating and Low-E glass. It fits residences, commercial and office buildings in various climates, especially where energy-saving is highly needed.
Excellent heat insulation: The aluminum alloy profile is divided by thermal insulation strips, blocking heat conduction in the metal frame and enhancing the window's heat insulation performance.
Good energy-saving effect: With high-performance glass, it can block ultraviolet and infrared radiation, reduce indoor-outdoor heat exchange and cut building energy consumption.
Sturdy and durable: Bridge-cutoff aluminum is of high strength, corrosion-resistant and has a long service life.



· 光伏幕墙

光伏幕墙是玻璃幕墙的一种特殊形式是以幕墙的形式将光伏组件安装在建筑物上， 使它既具有玻璃幕墙的建筑物围护结构功能，又可以利用太阳能发电的双重用途。

适用场景	楼体外墙
细节特点	钢性好、重量轻、 强度高，工艺性好，便于清洁，施工方便快捷，可回收利用、环保。

Photovoltaic curtain wall is a special form of glass curtain wall. Photovoltaic modules are installed on buildings in the form of curtain wall, so that it has the building envelope function of glass curtain wall and the dual purpose of using solar energy to generate electricity.

Applicable scene: outside the building wall

Detailed features: good steel, light weight, high strength, good craftsmanship, easy to clean, convenient and quick construction, recyclable, and environmentally friendly.



高性能窗墙系统/HIGH-PERFORMANCE WINDOW-WALL SYSTEM

· 耐火窗墙系统

窗框采用耐火材料制作， 玻璃为耐火玻璃。主要用于对安全防护有特殊需求的场所。

防火性能卓越	在一定时间内能够阻止火势蔓延， 为人员疏散和消防救援争取时间。
稳定性好	在高温条件下仍能保持结构的完整性和稳定性。
安全可靠	为建筑提供更高的安全保障。

Fire-resistant window-wall system: The window frame is made of fire-resistant materials and the glass is fire-resistant glass. It is mainly used in places with special needs for safety protection.
Excellent fire resistance: it can prevent the spread of fire in a certain period of time and save time for personnel evacuation and fire rescue.
Good stability: the integrity and stability of the structure can be maintained under high temperature.
Safety and reliability: provide higher safety guarantee for the building.





· 防弹窗墙系统

窗框和玻璃采用特殊的防弹材料制作。主要用于对安全防护有特殊需求的场所。

强大的防护能力	能够有效抵御外部的枪击、爆炸冲击等威胁。
安全保障	为特殊场所如银行、 大使馆、 重要政府机构等提供高度的安全防护。

Bulletproof window-wall system: The window frame and glass are made of special bulletproof materials. It is mainly used in places with special needs for safety protection.
Powerful protection capability: can effectively resist external shooting, explosion and other threats.
Security guarantee: provide high security protection for special places such as banks, embassies and important government agencies.

装配式窗墙系统/PREFABRICATED WINDOW-WALL SYSTEM

在工厂预制窗框和墙体模块， 现场进行快速组装。适用于各种建筑类型， 特别是工期紧张、对施工质量要求较高的项目。

高效施工	工厂化生产保证了产品质量和精度， 现场组装速度快，大大缩短施工周期。
质量稳定	标准化的生产流程确保了产品质量的一致性。
绿色环保	减少现场施工的建筑垃圾和环境污染。
灵活性强	可以根据不同的设计要求进行定制化生产。

Prefabricated window-wall system: Prefabricate window frames and wall modules in the factory and conduct rapid assembly on site. It is suitable for various building types, especially projects with tight construction periods and high requirements for construction quality.
Efficient construction: the factory production ensures the product quality and accuracy, the site assembly speed is fast, and the construction period is greatly shortened.
Stable quality: standardized production process ensures the consistency of product quality.
Green and environmental protection: reduce construction wastes and environmental pollution during site construction.
Strong flexibility: customized production according to different design requirements.



65系统窗
65 SYSTEM WINDOOR



玻璃规格 单玻及/夹胶/中空

材壁厚度 1.8mm

Glass Specifications Single/Laminated/Double glass

Wall thickness 1.8mm

65内开窗
65 Inward opening windows

内开平开窗别具优势，压线全内压保障良好密封性，有效隔音隔热。室内外框扇平齐，外观美观大气，既方便使用又能为家居添彩，值得选择。

The inward-opening casement window has unique advantages. The bead that can be fully pressed inward ensures good sealing performance and effectively provides sound insulation and heat insulation. The frames and sashes are flush both inside and outside, presenting a beautiful and elegant appearance. It is convenient to use and can add charm to your home, so it's worth choosing.

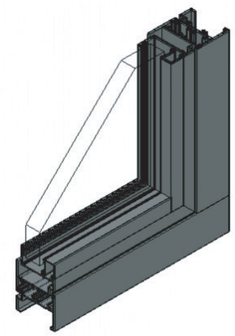

65平开门
65 Casement door

铝合金平开门优势显著，应用广泛。兼具防潮湿、防水、防腐蚀、防生锈功效，还能隔热隔音，为家居营造舒适环境，实用又耐用，是优质的门体选择。

Aluminum alloy hinged doors have remarkable advantages and are widely used. They have the functions of being moisture-proof, waterproof, corrosion-proof, rust-proof, as well as heat-insulating and sound-insulating, creating a comfortable environment for homes. They are practical and durable, and are an excellent choice for doors.

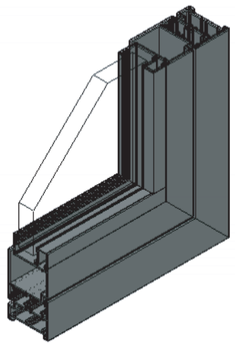

65外开窗
65 Outward opening windows

外开平开窗亮点颇多，压线全内压，密封出色，防风防雨效果好。室内外框扇平齐，外观大气美观，既实用又能提升建筑颜值，是优质门窗选择。

The outward-opening casement window has many highlights. With the bead fully pressed inward, it has excellent sealing performance and good wind and rain resistance. The frames and sashes are flush both inside and outside, presenting an elegant and beautiful appearance. It is both practical and can enhance the aesthetic value of the building, making it an excellent choice for doors and windows.

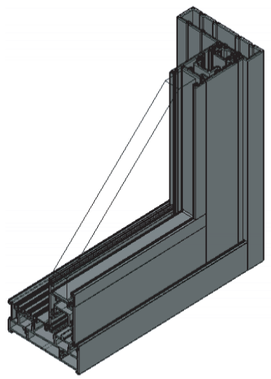

65地弹门
65 Swing door

低弹门优点颇多，安装过程简便，日常使用方便，外观美观大方，还具备可靠的安全性，能适配多种场所，轻松融入环境，为空间增添实用与美观兼具的独特魅力。

Low-elastic doors have many advantages. They are simple to install and convenient to use. They have an elegant appearance and reliable safety. They can be adapted to various places, easily blend into the environment, and add unique charm that combines practicality and aesthetics to the space.

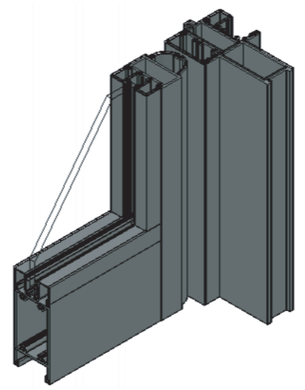





125提升推拉门
125 Lifting-Sliding Door

操作便捷易上手，轻松完成毫不费力。密封性佳，有效隔绝外界。稳定性更高，稳稳当当超可靠，带来优质使用体验。

玻璃规格 6mm+12A+6mm中空玻璃

Glass Specifications 6mm+12A+6mm insulating glass

It is convenient to operate and easy to get started with, allowing you to complete the operation effortlessly. It has excellent sealing performance, effectively isolating the outside world. Moreover, it enjoys higher stability, being steady and extremely reliable, thus bringing you a high-quality user experience.

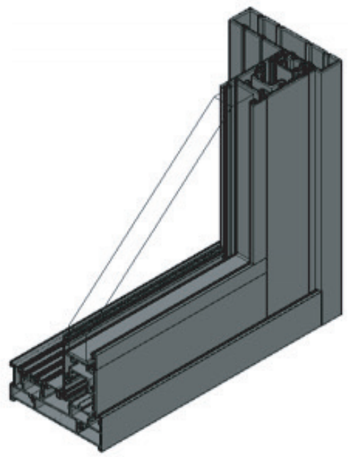

190推拉门
190 Sliding door

既方便实用可便捷使用，又美观大方赏心悦目，关键还安全可靠，时刻保障，带来稳稳当当的舒适之感。

玻璃规格 6mm+12A+6mm中空玻璃

Glass Specifications 6mm+12A+6mm insulating glass

It is not only convenient and practical for easy use, but also elegant and pleasing to the eye in appearance. What's more crucial is that it is safe and reliable, providing constant protection and bringing a sense of comfort and stability.

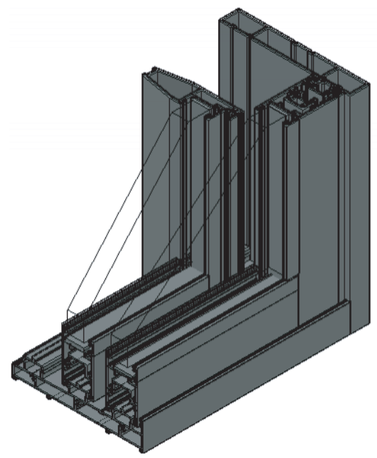





LS90A推拉窗
LS90A Sliding windows

这款产品采光性能格外突出，能让室内明亮通透。操作灵活简单，轻松上手。安全稳定有保障，且持久耐用，是十分靠谱的优质之选。

玻璃规格 单玻及中空玻璃

材壁厚度 1.8mm

Glass Specifications Single-pane glass and insulated glas

Wall thickness 1.8mm

The lighting performance of this product is particularly outstanding, enabling the interior to be bright and airy. It is flexible and simple to operate, making it easy to get started. It is safe and stable with reliable guarantees, and it is also durable for a long time. It is indeed a high-quality option that is highly reliable.

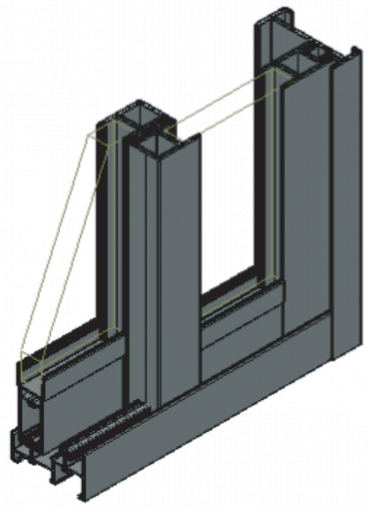

80合页隐藏式重型折叠门
KSZD 80 Heavy duty Bi-folding door

折叠门系统顶级概念设计，突破折叠系统设计，隐藏式结构，密封性更好。

玻璃规格 5mm+27A+5mm中空玻璃(玻璃槽口44mm)

构造尺寸 80mm

Glass Specifications 5mm+27A+5mm insulating glass (glass notch 44mm)

Construction dimensions 80mm

Top concept design of folding door system, breakthrough in folding system design, hidden structure, better sealing.

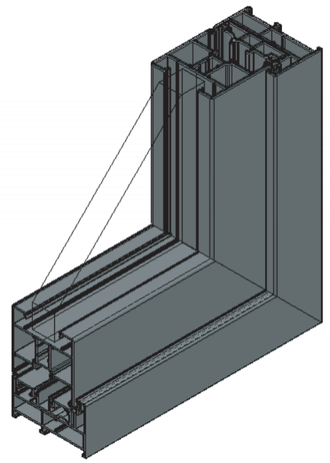

国企赋能
广亚智造

- 以客户为中心
- 全员服务
- 持续艰苦奋斗
- 合作、分享、共同发展
- 以人才为本

Empowered by state-owned enterprises Intelligently manufactured by Guangya

·Customer Centered
·Full services
·Continuous efforts
·Constant self-examination
·Working ,Sharing and growing up together
·Taking talents as the foundation of company development



PROJECT CASE



项目名称：金凯盛酒店　　项目面积：8000m²
项目地址：广东省四会市　　外墙系统：门窗幕墙系统

Project name: Jin Kaisheng Hotel
Location: Sihui City, Guangdong Province
Project area: 8000 m²
External wall system: door and window curtain wall system



项目名称：新世纪大酒店　　项目面积：5000m²
项目地址：广东省佛山市　　外墙系统：门窗幕墙系统

Project name: New Century Hotel
Location: Foshan City, Guangdong Province
Project area: 5000m²
External wall system: door and window curtain wall system



项目名称：三亚阅海观山度假村　　项目面积：18000m²
项目地址：海南省三亚市　　外墙系统：门窗系统

Project name: Sanya Yuehai Guanshan Resort
Location: Sanya City, Hainan Province
Project area: 18000 m²
External wall system: door and window system



项目名称：星山广场二期　　项目面积：2000m²
项目地址：巴布亚新几内亚　　外墙系统：门窗系统

Project name: Xingshan Plaza Phase II
Location: Papua New Guinea
Project area: 2000 m²
External wall system: door and window system

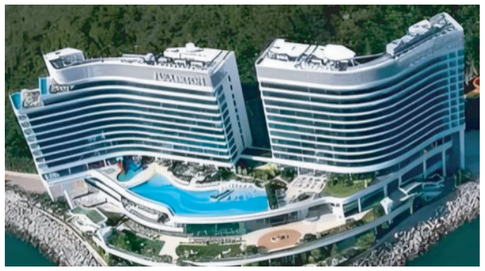

项目名称：香港富丽敦海洋公园酒店　　项目面积：8000m²
项目地址：中国香港　　外墙系统：门窗系统

Project Name: Ocean Park Hotel, Meridian Town, Hong Kong
Location: Hong Kong, China
Project area: 8000 m²
External wall system: door and window system



项目名称：悦辰花园　　项目面积：7000m²
项目地址：佛山市高明区　　外墙系统：门窗系统

Project Name: Yue Chen Garden
Location: Gaoming District, Foshan City
Project area: 7000 m²
External wall system: door and window system



项目名称：誉城•金凯盛　　项目面积：100000m²
项目地址：广东肇庆市　　外墙系统：门窗系统

Project name: Yucheng • Jin Kaisheng
Location: Zhaoqing City, Guangdong Province
Project area: 100000 m²
External wall system: door and window system



项目名称：香港电气道办公楼　　项目面积：6000m²
项目地址：中国香港　　外墙系统：单元幕墙木纹装饰系统

Project name: Hong Kong Electrical Road Office Building
Location: Hong Kong, China
Project area: 6000 m²
External wall system: Wood grain of unit curtain wall



项目名称：知识城广场三、 四期　　项目面积：5000m²
项目地址：广东省广州市　　外墙系统：幕墙系统

Project Name: Knowledge City Plaza Phase III and IV Project
Location: Guangzhou City, Guangdong Province
Project area: 5000 m²
External wall system: curtain wall system



项目名称：银河3A酒店　　项目面积：30000m²
项目地址：中国澳门　　外墙系统：门窗系统

Project name: Galaxy 3A Hotel
Location: Macau, China
Project area: 30000m2
External wall system: door and window system



项目名称：香港海洋公园　　项目面积：7500m²
项目地址：中国香港　　外墙系统：门窗及遮阳系统

Project name: Hong Kong Ocean Park
Location: Hong Kong, China
Project area: 7500 m²
External wall system: Doors, windows and sunshade systems



项目名称：香港机场项目　　项目面积：7500m²
项目地址：中国香港大屿山机场　　外墙系统：幕墙及铝板系统

Project name: Hong Kong Airport Project
Location: Lantau Airport, Hong Kong, China
Project area: 7500 m²
External wall system: cCurtain wall and aluminum plate



项目名称：英德铜业　　项目面积：10000m²
项目地址：中国广东英德市　　外墙系统：门窗幕墙系统

Project name: Yingde Copper
Location: Yingde City, Guangdong Province, China
Project area: 10000 m²
External wall system: door and window curtain wall system



项目名称：香港机场行政办公楼公园　　项目面积：4500m²
项目地址：中国香港大屿山　　外墙系统：门窗幕墙系统

Project name: Hong Kong Airport Administration Building Park
Location: Lantau Island, Hong Kong, China
Project area: 4500 m²
External wall system: door and window curtain wall system



项目名称：佰德广场　　项目面积：5000m²
项目地址：中国广东佛山南海区　　外墙系统：门窗系统

Project name: Baide Plaza
Location: Nanhai District, Foshan, Guangdong, China
Project area: 5000m²
External wall system: door and window system



项目名称：华南国际金融中心　　项目面积：100000m²
项目地址：中国广东佛山南海区　　外墙系统：单元玻璃幕墙系统

Project name: South China International Financial Center
Location: Nanhai District, Foshan, Guangdong, China
Project area: 100000 m²
External wall system: unit glass curtain wall system



项目名称：黄埔区升龙集团融四1#&9#楼　　项目面积：25000m²
项目地址：黄埔区知识城汤村　　外墙系统：幕墙系统

Project name: Building 1 #&9 # of Rongsi of Shenglong Group in Huangpu District
Location: Tang Village, Knowledge City, Huangpu District
Project area: 25000 m²
External wall system: curtain wall system



项目名称：澳洲FT01　　项目面积：5000m²
项目地址：澳大利亚墨尔本　　外墙系统：幕墙/框架系统

Project name: Australia FT01
Location: Melbourne, Australia
Project area: 5000m²
External Wall System: Curtain Wall/Frame System

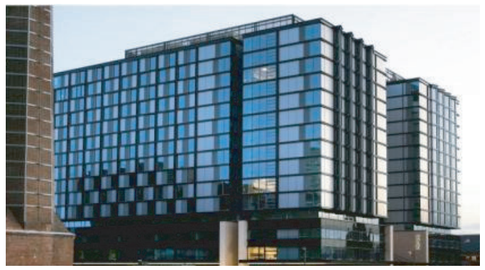

项目名称：CENTRAL PARK 4S　　项目面积：11000m²
项目地址：澳大利亚悉尼　　外墙系统：门窗系统

Project name: CENTRAL PARK 4S
Location: Sydney, Australia
Project area: 11000 m²
External wall system: door and window system



项目名称：澳洲4233项目　　项目面积：3500m²
项目地址：澳大利亚墨尔本　　外墙系统：门窗幕墙系统

Project name: 4233 Project in Australia
Location: Melbourne, Australia
Project area: 3500m²
External wall system: door and window curtain wall system



项目名称：好莱坞吉他酒店　　项目地址：美国佛罗里达州　　项目面积：8000m²　　外墙系统：幕墙系统

Project Name: Hollywood GuiHotel　　Location: Florida, USA　　Project area: 8000 m²　　External wall system: curtain wall system



项目名称：俄罗斯联邦大楼
外墙系统：单元幕墙系统

Project name: Russian Federation Building
Exterior wall system: unit curtain wall system



项目名称：英国万达广场
外墙系统：门窗幕墙系统

Project name: Wanda Plaza, UK
Exterior wall system: window and curtain wall system



项目名称：澳洲LANDMARK酒店
外墙系统：幕墙系统

Project name: Landmark Hotel Australia
Exterior wall system: curtain wall system



项目名称：广州知识塔　　外墙系统：幕墙系统

Project name: Guangzhou Knowledge Tower
External wall system: curtain wall system



项目名称：知识城产业聚集服务中心　　外墙系统：幕墙系统

Project name: Knowledge City Industrial Clustering Service Center
External wall system: curtain wall system

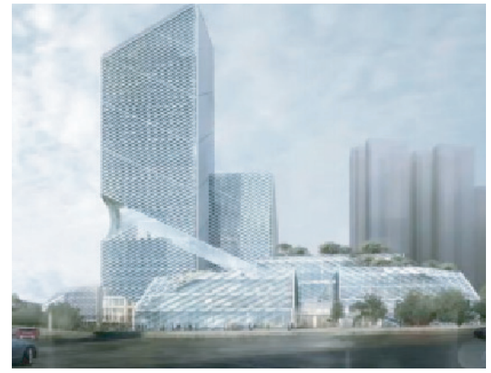

项目名称：LG小镇　　外墙系统：幕墙系统

Project name: LG Town
External wall system: curtain wall system



项目名称：西九龙法院工程　　外墙系统：门窗系统

Project name: West Kowloon Court Project
External wall system: door and window system



项目名称：知识城财富广场　　外墙系统：幕墙系统

Project name: Knowledge City Fortune Plaza
External wall system: curtain wall system



项目名称：长岭雅居　　外墙系统：幕墙系统

Project name: Changling Yaju
External wall system: curtain wall system



项目名称：广州市凯德星贸商务中心　　外墙系统：幕墙系统

Project name: Guangzhou Kaide Star Trade Business Center
External wall system: curtain wall system

CUSTOMER
企业合作伙伴

- 澳大利亚IBUILD
  Australia IBLILD
- 澳大利亚HERITAGE
  HERITAGE AUSTRALIA
- 澳大利亚B.T
  Australia B T
- 澳大利亚SEM
  Australian SEM
- 澳大利亚ADCO
  Australian ADCO
- 香港钜城公司
  Hong Kong Jucheng Company
- 香港德新公司
  Hongkong Dexin Co., Ltd
- 香港骏领公司
  Hongkong Junling Company
- 香港好时联盈
  Hongkong Haoshi Lianying
- 澳门保信公司
  Macau Baosight Corporation
- 深圳鸿联公司
  Shenzhen Honglian Company



客户名单
Customer list

公司主要工程业绩（国内）/ MAIN DEMONSTRATION PROJECTS (DOMESTIC)

项目名称 Project Name	总包方 General Contractor	单 位 Company	类 型 Product Type	面积（m^2） Area
香港西九龙法院 West Kowloon Court Hong Kong	瑞安 编号西九龙法院 Ruian No. West Kowloon Court	香港瑞安公司 Hong Kong Shui on Company	幕墙 Curtain Wall System	14,000
柬埔寨金边 Phnom Penh, Cambodia	鸿联建设 Honglian Construction	鸿联开发建设公司 Honglian Development and Construction Company	门窗幕墙 Window Door System	6,800
香港西环廖创兴银行 Liao Chuanghing Bank Hong Kong	廖创兴银行 Liao Chong Hing Bank	香港德新幕墙 HongKong De New Curtain Wall	幕墙 Curtain Wall System	8,500
罗格小学工程 Rogge primary project	佛山市其乐 Foshan Qile	佛山市其乐教育 Foshan City music education	门窗幕墙 Window Door System	10,000
佰德广场工程 Baide Square Project	佛山市合凯 Foshan Hekai	佛山市合凯 Foshan Hekai	门窗幕墙 Window Door System	26,000
誉城项目 Yucheng Project	电白二建 Electric White Two Construction	肇庆市鼎城 Ding City, Zhaoqing City	门窗幕墙 Window Door System	209,000

公司主要工程业绩（国外）/ MAIN DEMONSTRATION PROJECTS (OVERSEAS)

国 家 Country	项目名称 Project Name	类 型 Product Type	面积（m^2） Area	状 态 Status
澳洲/Australia	East Central Tower	幕墙 Curtain Wall System	11,000	Completed
澳洲/Australia	Arden Gardens	幕墙 Curtain Wall System	16,000	Completed
澳洲/Australia	295 Carlingford Apartment	门窗 Window Door System	20,000	Completed
澳洲/Australia	Central Park 4S	门窗 Window Door System	11,000	Completed
澳洲/Australia	466 Collins House	幕墙 Curtain Wall System	8,600	Completed
澳洲/Australia	Melbourne connect student accomodation building	门窗 Window Door System	7,000	Completed
澳洲/Australia	Seven hill apartment	门窗 Window Door System	8,000	Completed
澳洲/Australia	587 New Charsfield	幕墙 Curtain Wall System	7,000	Completed
澳洲/Australia	246 Coward Street	门窗 Window Door System	7,000	Completed